SGS-CSTC Standards Technical Services Co., Ltd.
Shenzhen Branch

No. 1 Workshop, M-10, Middle section, Science & Technology Park,
Shenzhen, Guangdong, China 518057
Telephone: +86 (0) 755 2601 2053
Fax: +86 (0) 755 2671 0594
Email: ee.shenzhen@sgs.com

TEST REPORT

Application No.:	SZEM1703002535CR
Applicant:	MEKBAO PLASTIC ELECTRONIC INDUSTRIAL CO. , LTD
Address of Applicant:	JIAOXI INDUSTRY AREAS LIANXIA CHENGHAI SHANTOU CITY, GD CHINA
Equipment Under Test (EUT):	
EUT Name:	Remote control car series
Model No.:	5588-605, 5588-606, 88881, 88606, 5588-622, 5588-616, 5588-617, 5588-618, 5588-623, 88612, 88613, 88882, 88605, 5588-620, 5588-607, 88607, 5588-619, 5588-621, 88614, 88615, 5588-604, 88604, 88616, 5588-612, 5588-613, 5588-614, 5588-615, 88617, 5588-603, 88603, 5588-608, 5588-609, 88608, 88609, 5588-610, 5588-611, 88610, 88611, 5588-601, 5588-602, 88601, 88602, 5588-701, 5588-702, 5588-703, 5588-704, 5588-705, 5588-706, 5588-707, 5588-708, 5588-709, 5588-710 ♣
♣	Please refer to section 2 of this report which indicates which model was actually tested and which were electrically identical.
Standards:	ETSI EN 300 220-1 V3.1.1 (2017-02) ETSI EN 300 220-2 V3.1.1 (2017-02)
Date of Receipt:	2017-03-30
Date of Test:	2017-04-05 to 2017-04-28
Date of Issue:	2017-05-09
Test Result:	**PASS ***

* In the configuration tested, the EUT detailed in this report complied with the standards specified above.

The CE mark as shown below can be used, under the responsibility of the manufacturer, after completion of an EU Declaration of Conformity and compliance with all relevant EU Directives.

Authorized Signature:

Jack Zhang
EMC Laboratory Manager

The manufacturer should ensure that all products in series production are in conformity with the product sample detailed in this report.
If the product in this report is used in any configuration other than that detailed in the report, the manufacturer must ensure the new system complies with all relevant standards. Any mention of SGS International Electrical Approvals or testing done by SGS International Electrical Approvals in connection with, distribution or use of the product described in this report must be approved by SGS International Electrical Approvals in writing.

This document is issued by the Company subject to its General Conditions of Service printed overleaf,-available on request or accessible at http://www.sgs.com/en/Terms-and-Conditions.aspx and, for electronic format documents, subject to Terms and Conditions for Electronic Documents at http://www.sgs.com/en/Terms-and-Conditions/Terms-e-Document.aspx. Attention is drawn to the limitation of liability, indemnification and jurisdiction issues defined therein. Any holder of this document is advised that information contained hereon reflects the Company's findings at the time of its intervention only and within the limits of Client's instructions, if any. The Company's sole responsibility is to its Client and this document does not exonerate parties to a transaction from exercising all their rights and obligations under the transaction documents. This document cannot be reproduced except in full, without prior written approval of the Company. Any unauthorized alteration, forgery or falsification of the content or appearance of this document is unlawful and offenders may be prosecuted to the fullest extent of the law. Unless otherwise stated the results shown in this test report refer only to the sample(s) tested and such sample(s) are retained for 30 days only.

REVISION HISTORY

Revision Record				
Version	**Chapter**	**Date**	**Modifier**	**Remark**
01		*2017-05-09*		*Original*

Tested By		Peter Geng **Peter Geng /Project Engineer**		2017-05-09 **Date**
Checked By		Eric Fu **Eric Fu /Reviewer**		2017-05-09 **Date**

This document is issued by the Company under its General Conditions of Service printed overleaf or available on request and accessible at http://www.sgs.com/terms_and_conditions.htm. Attention is drawn to the limitation of liability, indemnification and jurisdiction issues defined therein. Any holder of this document is advised that information contained hereon reflects the Company's findings at the time of its intervention only and within the limits of Client's instructions, if any. The Company's sole responsibility is to its Client and this document does not exonerate parties to a transaction from exercising all their rights and obligations under the transaction documents. Any unauthorized alteration, forgery or falsification of the content or appearance of this document is unlawful and offenders may be prosecuted to the fullest extent of the law." Unless otherwise stated the results shown in this test report refer only to the sample(s) tested. This document cannot be reproduced except in full, without prior approval of the Company.

2 Test Summary

Radio Spectrum Matter (RSM) Part				
Test	**Test Requirement**	**Test Method**	**Limit**	**Result**
Operating frequency	ETSI EN 300 220-2 V3.1.1 (2017-02) Clause 4.2.1.0	ETSI EN 300 220-1 V3.1.1(2017-02) Clause 5.1.1	ETSI EN 300 220-2 V3.1.1 (2017-02) Clause 4.2.1.2	Pass
Effective Radiated Power	ETSI EN 300 220-2 V3.1.1 (2017-02) Clause 4.3.1.0	ETSI EN 300 220-1 V3.1.1(2017-02) Clause 5.2.2	ETSI EN 300 220-2 V3.1.1 (2017-02) Clause 4.3.1.2	Pass
Maximum e.r.p. spectral density	ETSI EN 300 220-2 V3.1.1 (2017-02) Clause 4.3.2.0	ETSI EN 300 220-1 V3.1.1(2017-02) Clause 5.3.2	ETSI EN 300 220-2 V3.1.1 (2017-02) Clause 4.3.2.2	N/A
Duty Cycle	ETSI EN 300 220-2 V3.1.1 (2017-02) Clause 4.3.3.0	ETSI EN 300 220-1 V3.1.1(2017-02) Clause 5.4.2	ETSI EN 300 220-2 V3.1.1 (2017-02) Clause 4.3.3.2	N/A
Occupied Bandwidth	ETSI EN 300 220-2 V3.1.1 (2017-02) Clause 4.3.4.0	ETSI EN 300 220-1 V3.1.1(2017-02) Clause 5.6.3	ETSI EN 300 220-2 V3.1.1 (2017-02) Clause 4.3.4.2	Pass
Tx Out of Band Emissions	ETSI EN 300 220-2 V3.1.1 (2017-02) Clause 4.3.5.0	ETSI EN 300 220-1 V3.1.1(2017-02) Clause 5.8.3	ETSI EN 300 220-2 V3.1.1 (2017-02) Clause 4.3.5.2	N/A
Transient Power	ETSI EN 300 220-2 V3.1.1 (2017-02) Clause 4.3.6.0	ETSI EN 300 220-1 V3.1.1(2017-02) Clause 5.10.3	ETSI EN 300 220-2 V3.1.1 (2017-02) Clause 4.3.6.2	Pass
Adjacent Channel Power	ETSI EN 300 220-2 V3.1.1 (2017-02) Clause 4.3.7.0	ETSI EN 300 220-1 V3.1.1(2017-02) Clause 5.11.3	ETSI EN 300 220-2 V3.1.1 (2017-02) Clause 4.3.7.2	Pass
TX behaviour under Low Voltage Conditions	ETSI EN 300 220-2 V3.1.1 (2017-02) Clause 4.3.8.0	ETSI EN 300 220-1 V3.1.1(2017-02) Clause 5.12.3	ETSI EN 300 220-2 V3.1.1 (2017-02) Clause 4.3.8.2	Pass
Adaptive Power Control	ETSI EN 300 220-2 V3.1.1 (2017-02) Clause 4.3.9.0	ETSI EN 300 220-1 V3.1.1(2017-02) Clause 5.13.3	ETSI EN 300 220-2 V3.1.1 (2017-02) Clause 4.3.9.2	N/A
FHSS equipment	ETSI EN 300 220-2 V3.1.1 (2017-02) Clause 4.3.10.0	ETSI EN 300 220-1 V3.1.1(2017-02) Clause 4.3.5	ETSI EN 300 220-2 V3.1.1 (2017-02) Clause 4.3.10.2	N/A
Short term behaviour	ETSI EN 300 220-2 V3.1.1 (2017-02) Clause 4.3.11.0	ETSI EN 300 220-1 V3.1.1(2017-02) Clause 5.5.2	ETSI EN 300 220-2 V3.1.1 (2017-02) Clause 4.3.11.2	N/A
Unwanted emissions in the spurious domain	ETSI EN 300 220-2 V3.1.1 (2017-02) Clause 4.2.2.0	ETSI EN 300 220-1 V3.1.1(2017-02) Clause 5.9.3	ETSI EN 300 220-2 V3.1.1 (2017-02) Clause 4.2.2.2	Pass
RX Sensitivity	ETSI EN 300 220-2 V3.1.1 (2017-02) Clause 4.4.1.0	ETSI EN 300 220-1 V3.1.1(2017-02) Clause 5.14.3	ETSI EN 300 220-2 V3.1.1 (2017-02) Clause 4.4.1.2	N/A

This document is issued by the Company subject to its General Conditions of Service printed overleaf,–available on request or accessible at http://www.sgs.com/en/Terms-and-Conditions.aspx and, for electronic format documents, subject to Terms and Conditions for Electronic Documents at http://www.sgs.com/en/Terms-and-Conditions/Terms-e-Document.aspx. Attention is drawn to the limitation of liability, indemnification and jurisdiction issues defined therein. Any holder of this document is advised that information contained hereon reflects the Company's findings at the time of its intervention only and within the limits of Client's instructions, if any. The Company's sole responsibility is to its Client and this document does not exonerate parties to a transaction from exercising all their rights and obligations under the transaction documents. This document cannot be reproduced except in full, without prior written approval of the Company. Any unauthorized alteration, forgery or falsification of the content or appearance of this document is unlawful and offenders may be prosecuted to the fullest extent of the law. Unless otherwise stated the results shown in this test report refer only to the sample(s) tested and such sample(s) are retained for 30 days only.

Blocking	ETSI EN 300 220-2 V3.1.1 (2017-02) Clause 4.4.2.0	ETSI EN 300 220-1 V3.1.1(2017-02) Clause 5.18.6	ETSI EN 300 220-2 V3.1.1 (2017-02) Clause 4.4.2.2	Pass
Clear Channel Assessment threshold	ETSI EN 300 220-2 V3.1.1 (2017-02) Clause 4.5.2.0	ETSI EN 300 220-1 V3.1.1(2017-02) Clause 5.21.2.3	ETSI EN 300 220-2 V3.1.1 (2017-02) Clause 4.5.2.2	N/A
Polite spectrum access timing parameters	ETSI EN 300 220-2 V3.1.1 (2017-02) Clause 4.5.3.1	ETSI EN 300 220-1 V3.1.1(2017-02) Clause 5.21.3.2	ETSI EN 300 220-2 V3.1.1 (2017-02) Clause 4.5.3.2	N/A
Adaptive Frequency Agility	ETSI EN 300 220-2 V3.1.1 (2017-02) Clause 4.5.4.0	ETSI EN 300 220-1 V3.1.1(2017-02) Clause 5.21.4.2	ETSI EN 300 220-2 V3.1.1 (2017-02) Clause 4.5.4.2	N/A

Declaration of EUT Family Grouping:

Model No.: 5588-605, 5588-606, 88881, 88606, 5588-622, 5588-616, 5588-617, 5588-618, 5588-623, 88612, 88613, 88882, 88605, 5588-620, 5588-607, 88607, 5588-619, 5588-621, 88614, 88615, 5588-604, 88604, 88616, 5588-612, 5588-613, 5588-614, 5588-615, 88617, 5588-603, 88603, 5588-608, 5588-609, 88608, 88609, 5588-610, 5588-611, 88610, 88611, 5588-601, 5588-602, 88601, 88602, 5588-701, 5588-702, 5588-703, 5588-704, 5588-705, 5588-706, 5588-707, 5588-708, 5588-709, 5588-710

Only the model 5588-605was tested, since the electrical circuit design, layout, components used, internal wiring and functions were identical for all the above models, with only difference on colour, appearance and packing.

This document is issued by the Company subject to its General Conditions of Service printed overleaf,–available on request or accessible at http://www.sgs.com/en/Terms-and-Conditions.aspx and, for electronic format documents, subject to Terms and Conditions for Electronic Documents at http://www.sgs.com/en/Terms-and-Conditions/Terms-e-Document.aspx. Attention is drawn to the limitation of liability, indemnification and jurisdiction issues defined therein. Any holder of this document is advised that information contained hereon reflects the Company's findings at the time of its intervention only and within the limits of Client's instructions, if any. The Company's sole responsibility is to its Client and this document does not exonerate parties to a transaction from exercising all their rights and obligations under the transaction documents. This document cannot be reproduced except in full, without prior written approval of the Company. Any unauthorized alteration, forgery or falsification of the content or appearance of this document is unlawful and offenders may be prosecuted to the fullest extent of the law. Unless otherwise stated the results shown in this test report refer only to the sample(s) tested and such sample(s) are retained for 30 days only.

3 Contents

Page

1 COVER PAGE 1

2 TEST SUMMARY 3

3 CONTENTS 5

4 GENERAL INFORMATION 6

4.1 DETAILS OF EUT 6
4.2 DESCRIPTION OF SUPPORT UNITS 6
4.3 TEST LOCATION 7
4.4 TEST FACILITY 7
4.5 DEVIATION FROM STANDARDS 7
4.6 ABNORMALITIES FROM STANDARD CONDITIONS 7
4.7 OTHER INFORMATION REQUESTED BY THE CUSTOMER 7
4.8 MEASUREMENT UNCERTAINTY (95% CONFIDENCE LEVELS, K=2) 8

5 EQUIPMENT LIST 9

6 PARAMETERS AND TESTS 11

6.1.1 Operating frequency 11
6.1.2 Effective Radiated Power 12
6.1.3 Maximum e.r.p. spectral density 14
6.1.4 Duty Cycle 14
6.1.5 Occupied Bandwidth 15
6.1.6 Tx Out of Band Emissions 17
6.1.7 Transient Power 18
6.1.8 Adjacent Channel Power 20
6.1.9 TX behaviour under Low Voltage Conditions 22
6.1.10 Adaptive Power Control 23
6.1.11 FHSS equipment 23
6.1.12 Short term behaviour 23
6.1.13 Unwanted emissions in the spurious domain 24

6.2 RECEIVER REQUIREMENTS 27

6.2.1 RX Sensitivity 27
6.2.2 Blocking 28
6.2.3 Clear Channel Assessment threshold 29
6.2.4 Polite spectrum access timing parameters 29
6.2.5 Adaptive Frequency Agility 29

7 PHOTOGRAPHS 30

7.1 EIRP & SPURIOUS EMISSION OF TX 30
7.2 SPURIOUS EMISSION OF RX 30
7.3 EUT CONSTRUCTIONAL DETAILS 30

This document is issued by the Company subject to its General Conditions of Service printed overleaf,–available on request or accessible at http://www.sgs.com/en/Terms-and-Conditions.aspx and, for electronic format documents, subject to Terms and Conditions for Electronic Documents at http://www.sgs.com/en/Terms-and-Conditions/Terms-e-Document.aspx. Attention is drawn to the limitation of liability, indemnification and jurisdiction issues defined therein. Any holder of this document is advised that information contained hereon reflects the Company's findings at the time of its intervention only and within the limits of Client's instructions, if any. The Company's sole responsibility is to its Client and this document does not exonerate parties to a transaction from exercising all their rights and obligations under the transaction documents. This document cannot be reproduced except in full, without prior written approval of the Company. Any unauthorized alteration, forgery or falsification of the content or appearance of this document is unlawful and offenders may be prosecuted to the fullest extent of the law. Unless otherwise stated the results shown in this test report refer only to the sample(s) tested and such sample(s) are retained for 30 days only.

4 General Information

4.1 Details of EUT

Product Name:	Remote control car series
Model No.:	5588-605
Nominal Frequency:	27.145MHz
Modulation Technique:	FSK
Number of Channels:	1
Receiver category:	2
Antenna Type:	Integral
Power Supply:	Remote: DC 3V by 2 x 1.5V "AA" batteries Car: DC 6V by 4 x 1.5V "AA" batteries

4.2 Description of Support Units

The EUT has been tested independently.

This document is issued by the Company subject to its General Conditions of Service printed overleaf,–available on request or accessible at http://www.sgs.com/en/Terms-and-Conditions.aspx and, for electronic format documents, subject to Terms and Conditions for Electronic Documents at http://www.sgs.com/en/Terms-and-Conditions/Terms-e-Document.aspx. Attention is drawn to the limitation of liability, indemnification and jurisdiction issues defined therein. Any holder of this document is advised that information contained hereon reflects the Company's findings at the time of its intervention only and within the limits of Client's instructions, if any. The Company's sole responsibility is to its Client and this document does not exonerate parties to a transaction from exercising all their rights and obligations under the transaction documents. This document cannot be reproduced except in full, without prior written approval of the Company. Any unauthorized alteration, forgery or falsification of the content or appearance of this document is unlawful and offenders may be prosecuted to the fullest extent of the law. Unless otherwise stated the results shown in this test report refer only to the sample(s) tested and such sample(s) are retained for 30 days only.

4.3 Test Location

All tests were performed at:

SGS-CSTC Standards Technical Services Co., Ltd. Shenzhen Branch

No. 1 Workshop, M-10, Middle section, Science & Technology Park, Shenzhen, Guangdong, China 518057

Telephone: +86 (0) 755 2601 2053 Fax: +86 (0) 755 2671 0594

No tests were sub-contracted.

4.4 Test Facility

The test facility is recognized, certified, or accredited by the following organizations:

• **CNAS (No. CNAS L2929)**

CNAS has accredited SGS-CSTC Standards Technical Services Co., Ltd. Shenzhen Branch EMC Lab to ISO/IEC 17025:2005 General Requirements for the Competence of Testing and Calibration Laboratories (CNAS-CL01 Accreditation Criteria for the Competence of Testing and Calibration Laboratories) for the competence in the field of testing.

• **A2LA (Certificate No. 3816.01)**

SGS-CSTC Standards Technical Services Co., Ltd., Shenzhen EMC Laboratory is accredited by the American Association for Laboratory Accreditation(A2LA). Certificate No. 3816.01.

• **VCCI**

The 10m Semi-anechoic chamber and Shielded Room of SGS-CSTC Standards Technical Services Co., Ltd. have been registered in accordance with the Regulations for Voluntary Control Measures with Registration No.: G-823, R-4188, T-1153 and C-2383 respectively.

• **FCC – Registration No.: 556682**

SGS-CSTC Standards Technical Services Co., Ltd., Shenzhen EMC Laboratory has been registered and fully described in a report filed with the (FCC) Federal Communications Commission. The acceptance letter from the FCC is maintained in our files. Registration No.: 556682.

• **Industry Canada (IC)**

Two 3m Semi-anechoic chambers and the 10m Semi-anechoic chamber of SGS-CSTC Standards Technical Services Co., Ltd. Shenzhen Branch EMC Lab have been registered by Certification and Engineering Bureau of Industry Canada for radio equipment testing with Registration No.: 4620C-1, 4620C-2, 4620C-3.

4.5 Deviation from Standards

None

4.6 Abnormalities from Standard Conditions

None.

4.7 Other Information Requested by the Customer

None.

This document is issued by the Company subject to its General Conditions of Service printed overleaf,–available on request or accessible at http://www.sgs.com/en/Terms-and-Conditions.aspx and, for electronic format documents, subject to Terms and Conditions for Electronic Documents at http://www.sgs.com/en/Terms-and-Conditions/Terms-e-Document.aspx. Attention is drawn to the limitation of liability, indemnification and jurisdiction issues defined therein. Any holder of this document is advised that information contained hereon reflects the Company's findings at the time of its intervention only and within the limits of Client's instructions, if any. The Company's sole responsibility is to its Client and this document does not exonerate parties to a transaction from exercising all their rights and obligations under the transaction documents. This document cannot be reproduced except in full, without prior written approval of the Company. Any unauthorized alteration, forgery or falsification of the content or appearance of this document is unlawful and offenders may be prosecuted to the fullest extent of the law. Unless otherwise stated the results shown in this test report refer only to the sample(s) tested and such sample(s) are retained for 30 days only.

4.8 Measurement Uncertainty (95% confidence levels, k=2)

No.	Item	Measurement Uncertainty
1	Radio Frequency	7.25×10^{-8}
2	RF power, conducted	0.75dB
3	Maximum frequency deviation – within 300Hz and 6kHz of audio frequency	4.1%
	Maximum frequency deviation – within 6kHz and 25kHz of audio frequency	2.5%
4	Adjacent channel power	0.75dB
5	Radiated Spurious emission test	4.5dB (30MHz-1GHz)
		4.8dB (1GHz-12.75GHz)
6	Conducted spurious emission	0.75dB
7	Temperature test	1℃
8	Humidity test	3%
9	DC power voltages	0.5%

This document is issued by the Company subject to its General Conditions of Service printed overleaf,–available on request or accessible at http://www.sgs.com/en/Terms-and-Conditions.aspx and, for electronic format documents, subject to Terms and Conditions for Electronic Documents at http://www.sgs.com/en/Terms-and-Conditions/Terms-e-Document.aspx. Attention is drawn to the limitation of liability, indemnification and jurisdiction issues defined therein. Any holder of this document is advised that information contained hereon reflects the Company's findings at the time of its intervention only and within the limits of Client's instructions, if any. The Company's sole responsibility is to its Client and this document does not exonerate parties to a transaction from exercising all their rights and obligations under the transaction documents. This document cannot be reproduced except in full, without prior written approval of the Company. Any unauthorized alteration, forgery or falsification of the content or appearance of this document is unlawful and offenders may be prosecuted to the fullest extent of the law. Unless otherwise stated the results shown in this test report refer only to the sample(s) tested and such sample(s) are retained for 30 days only.

5 Equipment List

RF conducted test						
Item	**Test Equipment**	**Manufacturer**	**Model No.**	**Inventory No.**	**Cal. Date (yyyy-mm-dd)**	**Cal. Due date (yyyy-mm-dd)**
1	Temperature Chamber	GuangZhou GongWen	GDJW-100	SEM002-02	2016-07-18	2017-07-18
2	DC Power Supply	ZhaoXin	RXN-305D	SEM011-02	2016-10-09	2017-10-09
3	Spectrum Analyzer	Rohde & Schwarz	FSP	SEM004-06	2016-10-09	2017-10-09
4	Barometer	ChangChun	DYM3	SEM002-01	2017-04-25	2018-04-25
5	Signal Generator	Rohde & Schwarz	SML03	SEM006-02	2017-04-25	2018-04-25
6	Band filter	Amindeon	Asi 3314	SEM023-01	N/A	N/A
7	Power Meter	Rohde & Schwarz	NRVS	SEM014-02	2016-10-09	2017-10-09
8	NOISE GENERATOR	Beijin Daming Jidian	DM1660	EMC0047	2016-08-21	2017-08-21

RE in Chamber						
Item	**Test Equipment**	**Manufacturer**	**Model No.**	**Inventory No.**	**Cal. Date (yyyy-mm-dd)**	**Cal. Due date (yyyy-mm-dd)**
1	3m Semi-Anechoic Chamber	ETS-LINDGREN	N/A	SEM001-01	2016-05-13	2017-05-13
2	EMI Test Receiver	Agilent Technologies	N9038A	SEM004-05	2016-10-09	2017-10-09
3	BiConiLog Antenna (26-3000MHz)	ETS-LINDGREN	3142C	SEM003-01	2014-11-01	2017-11-01
4	Double-ridged horn (1-18GHz)	ETS-LINDGREN	3117	SEM003-11	2015-10-17	2018-10-17
5	Horn Antenna (18-26GHz)	ETS-LINDGREN	3160	SEM003-12	2014-11-24	2017-11-24
6	Pre-amplifier (0.1-1300MHz)	Agilent Technologies	8447D	SEM005-01	2017-04-25	2018-04-25
7	Band filter	Amindeon	Asi 3314	SEM023-01	N/A	N/A
8	DC Power Supply	Zhao Xin	RXN-305D	SEM011-02	2016-10-09	2017-10-09
9	Loop Antenna	Beijing Daze	ZN30401	SEM003-09	2015-05-13	2018-05-13

This document is issued by the Company subject to its General Conditions of Service printed overleaf,–available on request or accessible at http://www.sgs.com/en/Terms-and-Conditions.aspx and, for electronic format documents, subject to Terms and Conditions for Electronic Documents at http://www.sgs.com/en/Terms-and-Conditions/Terms-e-Document.aspx. Attention is drawn to the limitation of liability, indemnification and jurisdiction issues defined therein. Any holder of this document is advised that information contained hereon reflects the Company's findings at the time of its intervention only and within the limits of Client's instructions, if any. The Company's sole responsibility is to its Client and this document does not exonerate parties to a transaction from exercising all their rights and obligations under the transaction documents. This document cannot be reproduced except in full, without prior written approval of the Company. Any unauthorized alteration, forgery or falsification of the content or appearance of this document is unlawful and offenders may be prosecuted to the fullest extent of the law. Unless otherwise stated the results shown in this test report refer only to the sample(s) tested and such sample(s) are retained for 30 days only.

General used equipment						
Item	**Test Equipment**	**Manufacturer**	**Model No.**	**Inventory No.**	**Cal. Date (yyyy-mm-dd)**	**Cal. Due date (yyyy-mm-dd)**
1	Humidity/ Temperature Indicator	Shanghai Meteorological Industry Factory	ZJ1-2B	SEM002-03	2016-10-12	2017-10-12
2	Humidity/ Temperature Indicator	Shanghai Meteorological Industry Factory	ZJ1-2B	SEM002-04	2016-10-12	2017-10-12
3	Humidity/ Temperature Indicator	Mingle	N/A	SEM002-08	2016-10-12	2017-10-12
4	Barometer	Changchun Meteorological Industry Factory	DYM3	SEM002-01	2016-05-18	2017-05-18

This document is issued by the Company subject to its General Conditions of Service printed overleaf,–available on request or accessible at http://www.sgs.com/en/Terms-and-Conditions.aspx and, for electronic format documents, subject to Terms and Conditions for Electronic Documents at http://www.sgs.com/en/Terms-and-Conditions/Terms-e-Document.aspx. Attention is drawn to the limitation of liability, indemnification and jurisdiction issues defined therein. Any holder of this document is advised that information contained hereon reflects the Company's findings at the time of its intervention only and within the limits of Client's instructions, if any. The Company's sole responsibility is to its Client and this document does not exonerate parties to a transaction from exercising all their rights and obligations under the transaction documents. This document cannot be reproduced except in full, without prior written approval of the Company. Any unauthorized alteration, forgery or falsification of the content or appearance of this document is unlawful and offenders may be prosecuted to the fullest extent of the law. Unless otherwise stated the results shown in this test report refer only to the sample(s) tested and such sample(s) are retained for 30 days only.

6 Parameters and tests

6.1.1 Operating frequency

Test Method: EN 300 220-1 Clause 5.1.1
Test Requirement: EN 300 220-2 Clause 4.2.1.0
EUT Operation:
Ambient: Temp.: 24.0 °C Humid.: 52 % Press.: 1020 mbar
Test Status: Tx mode
Limit: 26.957 MHz to 27.283MHz

Test Setup:

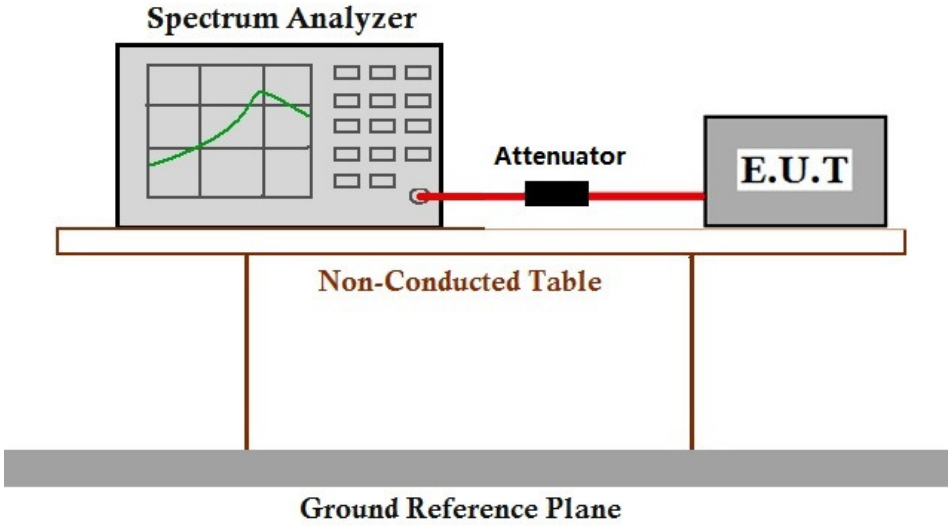

Equipment Used: Refer to section 5 for details.

Test Data:

Measurement Conditions		Operating frequency	Nominal Operating Frequency	OCW	Limit (dBm)	Result
T_{normal} (24°C)	$V_{norm:}$ 3.0V dc	27.145MHz	27.145MHz	15.48kHz	26.957 MHz to 27.283MHz	PASS

This document is issued by the Company subject to its General Conditions of Service printed overleaf,–available on request or accessible at http://www.sgs.com/en/Terms-and-Conditions.aspx and, for electronic format documents, subject to Terms and Conditions for Electronic Documents at http://www.sgs.com/en/Terms-and-Conditions/Terms-e-Document.aspx. Attention is drawn to the limitation of liability, indemnification and jurisdiction issues defined therein. Any holder of this document is advised that information contained hereon reflects the Company's findings at the time of its intervention only and within the limits of Client's instructions, if any. The Company's sole responsibility is to its Client and this document does not exonerate parties to a transaction from exercising all their rights and obligations under the transaction documents. This document cannot be reproduced except in full, without prior written approval of the Company. Any unauthorized alteration, forgery or falsification of the content or appearance of this document is unlawful and offenders may be prosecuted to the fullest extent of the law. Unless otherwise stated the results shown in this test report refer only to the sample(s) tested and such sample(s) are retained for 30 days only.

6.1.2 Effective Radiated Power

Test Method: EN 300 220-1 Clause 5.2.2

Test Requirement: EN 300 220-2 Clause 4.3.1.0

EUT Operation:

Ambient: Temp.: 21.0 °C Humid.: 53 % Press.: 1015 mbar

Test Status: Tx mode

Test Setup:

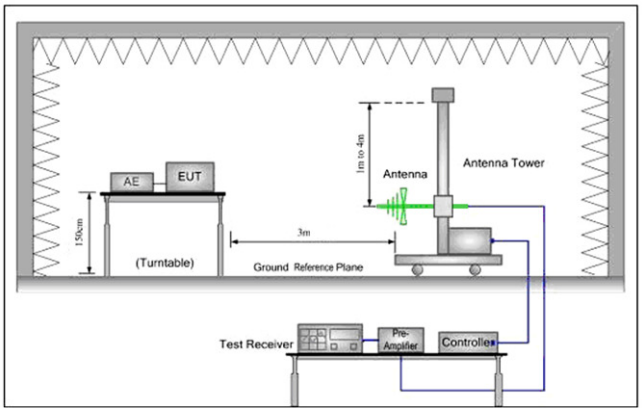

Test Procedure:

1) The EUT was powered ON and placed on a 1.5m high table in the chamber. The antenna of the transmitter was extended to its maximum length. Receiver mode and the measuring receiver shall be tuned to the frequency of the transmitter under test.
2) The disturbance of the transmitter was maximized on the test receiver display by raising and lowering from 1m to 4m the receive antenna and by rotating through 360° the turntable. After the fundamental emission was maximized, a field strength measurement was made.
3) Steps 1) and 2) were performed with the EUT and the receive antenna in both vertical and horizontal polarization.
4) The transmitter was then removed and replaced with another antenna. The center of the antenna was approximately at the same location as the center of the transmitter.
5) A signal at the disturbance was fed to the substitution antenna by means of a non-radiating cable. With both the substitution and the receive antennas horizontally polarized, the receive antenna was raised and lowered to obtain a maximum reading at the test receiver. The level of the signal generator was adjusted until the measured field strength level in step 2) is obtained for this set of conditions.
6) The output power into the substitution antenna was then measured.

This document is issued by the Company subject to its General Conditions of Service printed overleaf,–available on request or accessible at http://www.sgs.com/en/Terms-and-Conditions.aspx and, for electronic format documents, subject to Terms and Conditions for Electronic Documents at http://www.sgs.com/en/Terms-and-Conditions/Terms-e-Document.aspx. Attention is drawn to the limitation of liability, indemnification and jurisdiction issues defined therein. Any holder of this document is advised that information contained hereon reflects the Company's findings at the time of its intervention only and within the limits of Client's instructions, if any. The Company's sole responsibility is to its Client and this document does not exonerate parties to a transaction from exercising all their rights and obligations under the transaction documents. This document cannot be reproduced except in full, without prior written approval of the Company. Any unauthorized alteration, forgery or falsification of the content or appearance of this document is unlawful and offenders may be prosecuted to the fullest extent of the law. Unless otherwise stated the results shown in this test report refer only to the sample(s) tested and such sample(s) are retained for 30 days only.

7) Steps 5) and 6) were repeated with both antennas polarized.

8) Calculate power in dBm by the following formula:

ERP(dBm) = Pg(dBm) – cable loss (dB) + antenna gain (dBd)

where:

Pg is the generator output power into the substitution antenna.

Equipment Used: Refer to section 5 for details.

Limit: EN 300 220-2 Table B.1

Test Data:

Measurement Conditions		Operation Frequency	ERP	Limit	Result
T_{normal} (24°C)	$V_{norm:}$ 3.0V dc	27.145 MHz	-16.61 dBm	10 dBm (i.e. 10 mW)	PASS

This document is issued by the Company subject to its General Conditions of Service printed overleaf,–available on request or accessible at http://www.sgs.com/en/Terms-and-Conditions.aspx and, for electronic format documents, subject to Terms and Conditions for Electronic Documents at http://www.sgs.com/en/Terms-and-Conditions/Terms-e-Document.aspx. Attention is drawn to the limitation of liability, indemnification and jurisdiction issues defined therein. Any holder of this document is advised that information contained hereon reflects the Company's findings at the time of its intervention only and within the limits of Client's instructions, if any. The Company's sole responsibility is to its Client and this document does not exonerate parties to a transaction from exercising all their rights and obligations under the transaction documents. This document cannot be reproduced except in full, without prior written approval of the Company. Any unauthorized alteration, forgery or falsification of the content or appearance of this document is unlawful and offenders may be prosecuted to the fullest extent of the law. Unless otherwise stated the results shown in this test report refer only to the sample(s) tested and such sample(s) are retained for 30 days only.

6.1.3 Maximum e.r.p. spectral density

Not applicable, since the test item is for device below:

1) Maximum e.r.p. spectral density applies to transmitters using annex B bands I, L.

2) Maximum e.r.p. spectral density applies to transmitters using DSSS or wideband techniques other than FHSS modulation, in annex C band X.

Please also refer to ETSI EN 300 220-2 V3.1.1 (2017-02) Clause 4.3.2.0.

6.1.4 Duty Cycle

Requirement: EN 300 220-2 Clause 4.3.3

Item Declarations: Value provider declarations Limit Result

Duty Cycle:

According to the EN 300 220-1 Clause 7.10.2, no duty cycle restriction in 26.957MHz to 27.283 MHz.

This document is issued by the Company subject to its General Conditions of Service printed overleaf,–available on request or accessible at http://www.sgs.com/en/Terms-and-Conditions.aspx and, for electronic format documents, subject to Terms and Conditions for Electronic Documents at http://www.sgs.com/en/Terms-and-Conditions/Terms-e-Document.aspx. Attention is drawn to the limitation of liability, indemnification and jurisdiction issues defined therein. Any holder of this document is advised that information contained hereon reflects the Company's findings at the time of its intervention only and within the limits of Client's instructions, if any. The Company's sole responsibility is to its Client and this document does not exonerate parties to a transaction from exercising all their rights and obligations under the transaction documents. This document cannot be reproduced except in full, without prior written approval of the Company. Any unauthorized alteration, forgery or falsification of the content or appearance of this document is unlawful and offenders may be prosecuted to the fullest extent of the law. Unless otherwise stated the results shown in this test report refer only to the sample(s) tested and such sample(s) are retained for 30 days only.

6.1.5 Occupied Bandwidth

Test Method: EN 300 220-1 Clause 5.6.3.4

Test Requirement: EN 300 220-2 Clause 4.3.4.0

EUT Operation:

Ambient: Temp.: 24.0 °C Humid.: 52 % Press.: 1020 mbar

Test Status: Tx mode under normal test conditions and extreme test conditions

Limit: 26.957 MHz to 27.283MHz

Measurement procedure: RBW: 1 % to 3 % of OCW without being below 100 Hz
VBW: >=3*RBW
Span: >=2 x Operating Channel width
Detector Mode: RMS
Trace: Max hold

Test Setup:

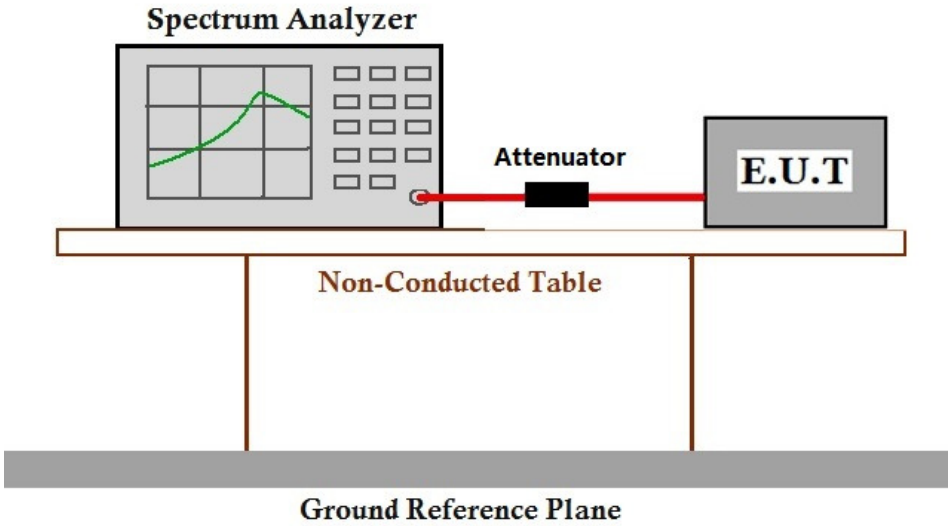

Equipment Used: Refer to section 5 for details.

This document is issued by the Company subject to its General Conditions of Service printed overleaf,–available on request or accessible at http://www.sgs.com/en/Terms-and-Conditions.aspx and, for electronic format documents, subject to Terms and Conditions for Electronic Documents at http://www.sgs.com/en/Terms-and-Conditions/Terms-e-Document.aspx. Attention is drawn to the limitation of liability, indemnification and jurisdiction issues defined therein. Any holder of this document is advised that information contained hereon reflects the Company's findings at the time of its intervention only and within the limits of Client's instructions, if any. The Company's sole responsibility is to its Client and this document does not exonerate parties to a transaction from exercising all their rights and obligations under the transaction documents. This document cannot be reproduced except in full, without prior written approval of the Company. Any unauthorized alteration, forgery or falsification of the content or appearance of this document is unlawful and offenders may be prosecuted to the fullest extent of the law. Unless otherwise stated the results shown in this test report refer only to the sample(s) tested and such sample(s) are retained for 30 days only.

Test Data:

Measurement Conditions		Operating frequency	Nominal Operating Frequency	OBW	Limit (dBm)	Result
T_{normal} (24°C)	$V_{norm:}$ 3.0V dc	27.145MHz	27.145MHz	9.72kHz	26.957 MHz to 27.283MHz	PASS

Remark: Tests were conducted in normal and extreme test conditions and the worst case (normal conditions) is reported only.

This document is issued by the Company subject to its General Conditions of Service printed overleaf,–available on request or accessible at http://www.sgs.com/en/Terms-and-Conditions.aspx and, for electronic format documents, subject to Terms and Conditions for Electronic Documents at http://www.sgs.com/en/Terms-and-Conditions/Terms-e-Document.aspx. Attention is drawn to the limitation of liability, indemnification and jurisdiction issues defined therein. Any holder of this document is advised that information contained hereon reflects the Company's findings at the time of its intervention only and within the limits of Client's instructions, if any. The Company's sole responsibility is to its Client and this document does not exonerate parties to a transaction from exercising all their rights and obligations under the transaction documents. This document cannot be reproduced except in full, without prior written approval of the Company. Any unauthorized alteration, forgery or falsification of the content or appearance of this document is unlawful and offenders may be prosecuted to the fullest extent of the law. Unless otherwise stated the results shown in this test report refer only to the sample(s) tested and such sample(s) are retained for 30 days only.

6.1.6 Tx Out of Band Emissions

Since the OCW<=25kHz, the test item is not applicable.

Please also refer to ETSI EN 300 220-2 V3.1.1 (2017-02) Clause 4.3.5.0.

This document is issued by the Company subject to its General Conditions of Service printed overleaf,–available on request or accessible at http://www.sgs.com/en/Terms-and-Conditions.aspx and, for electronic format documents, subject to Terms and Conditions for Electronic Documents at http://www.sgs.com/en/Terms-and-Conditions/Terms-e-Document.aspx. Attention is drawn to the limitation of liability, indemnification and jurisdiction issues defined therein. Any holder of this document is advised that information contained hereon reflects the Company's findings at the time of its intervention only and within the limits of Client's instructions, if any. The Company's sole responsibility is to its Client and this document does not exonerate parties to a transaction from exercising all their rights and obligations under the transaction documents. This document cannot be reproduced except in full, without prior written approval of the Company. Any unauthorized alteration, forgery or falsification of the content or appearance of this document is unlawful and offenders may be prosecuted to the fullest extent of the law. Unless otherwise stated the results shown in this test report refer only to the sample(s) tested and such sample(s) are retained for 30 days only.

6.1.7 Transient Power

Test Method: EN 300 220-1 Clause 5.10.3

Test Requirement: EN 300 220-2 Clause 4.3.6.0

EUT Operation:

Ambient: Temp.: 21.0 °C Humid.: 52 % Press.: 1005 mbar

Test Status: Tx mode

Test Procedure: VBW/RBW>=10

Sweep time: 500ms

RBW filter: Gaussian

Trace detector: RMS

Trace mode: Max hold

Sweep points:501

Measurement mode: continuous sweep

The used modulation shall be D-M3. The analyser shall be set to the settings of Table 25 and a measurement shall be started for each offset frequency. The EUT shall transmit at least five D-M3 test signal. The peak value shall be recorded and the measurement shall be repeated at each offset frequency mentioned in Table 24.

Test Setup:

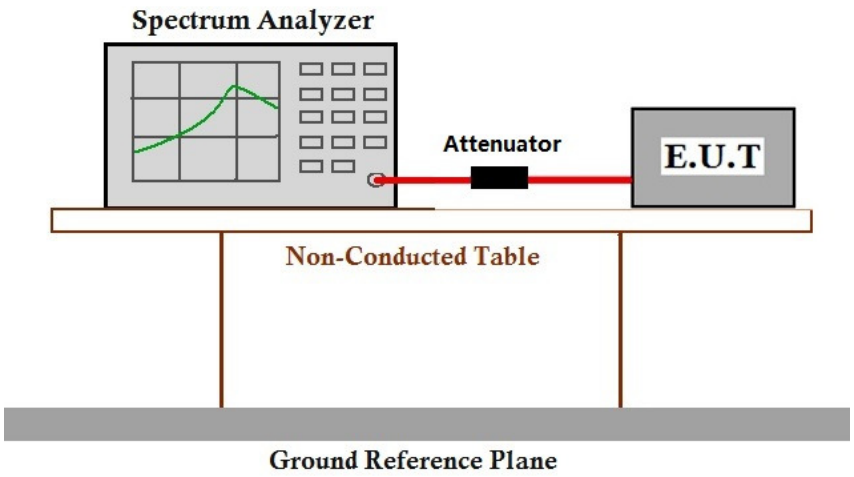

Equipment Used: Refer to section 5 for details.

Limit: The Transient Power should not exceed the values given in Table 23

Table 23: Transmitter Transient Power limits

Absolute offset from centre frequency	RBW_{REF}	Peak power limit applicable at measurement points
≤ 400 kHz	1 kHz	0 dBm
> 400 kHz	1 kHz	-27 dBm

This document is issued by the Company subject to its General Conditions of Service printed overleaf,–available on request or accessible at http://www.sgs.com/en/Terms-and-Conditions.aspx and, for electronic format documents, subject to Terms and Conditions for Electronic Documents at http://www.sgs.com/en/Terms-and-Conditions/Terms-e-Document.aspx. Attention is drawn to the limitation of liability, indemnification and jurisdiction issues defined therein. Any holder of this document is advised that information contained hereon reflects the Company's findings at the time of its intervention only and within the limits of Client's instructions, if any. The Company's sole responsibility is to its Client and this document does not exonerate parties to a transaction from exercising all their rights and obligations under the transaction documents. This document cannot be reproduced except in full, without prior written approval of the Company. Any unauthorized alteration, forgery or falsification of the content or appearance of this document is unlawful and offenders may be prosecuted to the fullest extent of the law. Unless otherwise stated the results shown in this test report refer only to the sample(s) tested and such sample(s) are retained for 30 days only.

Test Data:

Measurement points: offset from centre frequency	**Transient Power (dBm) REF**	**Limit(dBm)**	**Result**
-0,5 x OCW - 3 kHz 0,5 x OCW + 3 kHz Not applicable for OCW < 25 kHz	N/A	0	N/A
-12,5 kHz or -OCW whichever is the greater	-48.33	0	PASS
12,5 kHz or OCW whichever is the greater	-48.56	0	PASS
-0,5 x OCW - 400 kHz	-82.69	-27	PASS
0,5 x OCW + 400 kHz	-80.32	-27	PASS
-0,5 x OCW -1 200 kHz	-94.32	-27	PASS
0,5 x OCW + 1 200 kHz	-96.86	-27	PASS
Remark: OCW is 15.48kHz per the result of sub clause 6.1.6			

This document is issued by the Company subject to its General Conditions of Service printed overleaf,–available on request or accessible at http://www.sgs.com/en/Terms-and-Conditions.aspx and, for electronic format documents, subject to Terms and Conditions for Electronic Documents at http://www.sgs.com/en/Terms-and-Conditions/Terms-e-Document.aspx. Attention is drawn to the limitation of liability, indemnification and jurisdiction issues defined therein. Any holder of this document is advised that information contained hereon reflects the Company's findings at the time of its intervention only and within the limits of Client's instructions, if any. The Company's sole responsibility is to its Client and this document does not exonerate parties to a transaction from exercising all their rights and obligations under the transaction documents. This document cannot be reproduced except in full, without prior written approval of the Company. Any unauthorized alteration, forgery or falsification of the content or appearance of this document is unlawful and offenders may be prosecuted to the fullest extent of the law. Unless otherwise stated the results shown in this test report refer only to the sample(s) tested and such sample(s) are retained for 30 days only.

6.1.8 Adjacent Channel Power

Test Method: EN 300 220-1 Clause 5.11.3

Test Requirement: EN 300 220-2 Clause 4.3.7.2

EUT Operation:

Ambient: Temp.: 24.0 °C Humid.: 52 % Press.: 1020 mbar

Test Status: Tx mode

Test Procedure: Center frequency: The nominal operating frequency

RBW=100Hz

VBW>=3*RBW

Span:>=5*operating channel width

Trace detector: RMS

Trace mode: Max hold

Test Setup:

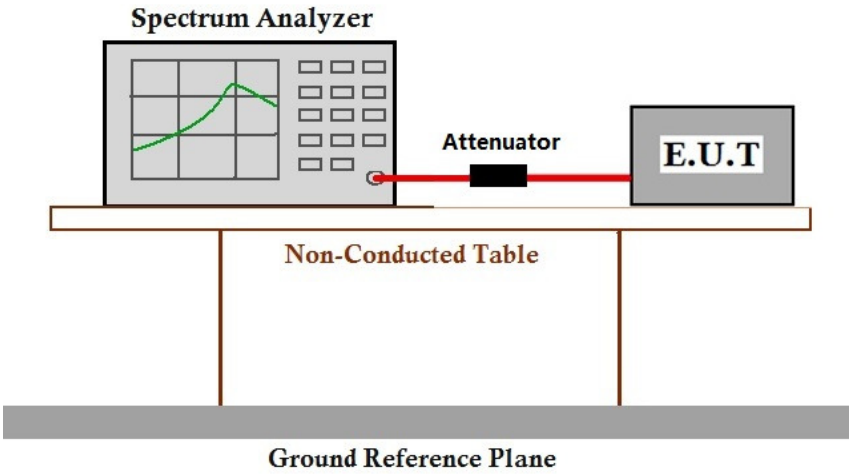

Equipment Used: Refer to section 5 for details.

Limit: Where the operating channel width is less than or equal to 25 kHz, the power in the adjacent channels shall not exceed the values given in Table 26

Table 26: Adjacent channel power limits for transmitters with OCW ≤ 25 kHz

		Adjacent Channel power integrated over 0,7 x OCW	Alternate Adjacent Channel power integrated over 0,7 x OCW
OCW < 20 kHz	Normal test conditions	-20 dBm	-20 dBm
	Extreme test conditions	-15 dBm	-20 dBm
OCW ≥ 20 kHz	Normal test conditions	-37 dBm	-40 dBm
	Extreme test conditions	-32 dBm	-37 dBm

This document is issued by the Company subject to its General Conditions of Service printed overleaf,–available on request or accessible at http://www.sgs.com/en/Terms-and-Conditions.aspx and, for electronic format documents, subject to Terms and Conditions for Electronic Documents at http://www.sgs.com/en/Terms-and-Conditions/Terms-e-Document.aspx. Attention is drawn to the limitation of liability, indemnification and jurisdiction issues defined therein. Any holder of this document is advised that information contained hereon reflects the Company's findings at the time of its intervention only and within the limits of Client's instructions, if any. The Company's sole responsibility is to its Client and this document does not exonerate parties to a transaction from exercising all their rights and obligations under the transaction documents. This document cannot be reproduced except in full, without prior written approval of the Company. Any unauthorized alteration, forgery or falsification of the content or appearance of this document is unlawful and offenders may be prosecuted to the fullest extent of the law. Unless otherwise stated the results shown in this test report refer only to the sample(s) tested and such sample(s) are retained for 30 days only.

Test Data:

Measurement Conditions (in Normal & Extreme)		Adjacent channel	ACP Measured (dBm)	Limit (dBm)	Result
T_{normal} (24°C)	$V_{norm:}$ 3.0V dc	+adjacent channel	-23.5	-20 (10μW)	PASS
		-adjacent channel	-24.1		
T_{upper} (+55°C) after Tx on for 30 minutes	$V_{max:}$ 3.0V dc	+adjacent channel	-23.6	-15 (32μW)	PASS
		-adjacent channel	-24.2		
	$V_{min:}$ 2.55V dc	+adjacent channel	-24.3	-15 (32μW)	PASS
		-adjacent channel	-24.8		
T_{lower} (-10°C) after Tx on for 1 minute	$V_{max:}$ 3.0V dc	+adjacent channel	-23.9	-15 (32μW)	PASS
		-adjacent channel	-24.7		
	$V_{min:}$ 2.55V dc	+adjacent channel	-24.5	-15 (32μW)	PASS
		-adjacent channel	-25.2		

Measurement Conditions (in Normal & Extreme)		Alternate channel	ACP Measured (dBm)	Limit (dBm)	Result
T_{normal} (24°C)	$V_{norm:}$ 3.0V dc	+alternate channel	-30.4	-20 (10μW)	PASS
		-alternate channel	-30.2		
T_{upper} (+55°C) after Tx on for 30 minutes	$V_{max:}$ 3.0V dc	+alternate channel	-30.5	-20 (10μW)	PASS
		-alternate channel	-30.3		
	$V_{min:}$ 2.55V dc	+alternate channel	-30.6	-20 (10μW)	PASS
		-alternate channel	-30.4		
T_{lower} (-10°C) after Tx on for 1 minute	$V_{max:}$ 3.0V dc	+alternate channel	-30.9	-20 (10μW)	PASS
		-alternate channel	-30.8		
	$V_{min:}$ 2.55V dc	+alternate channel	-31.2	-20 (10μW)	PASS
		-alternate channel	-31.0		

This document is issued by the Company subject to its General Conditions of Service printed overleaf,–available on request or accessible at http://www.sgs.com/en/Terms-and-Conditions.aspx and, for electronic format documents, subject to Terms and Conditions for Electronic Documents at http://www.sgs.com/en/Terms-and-Conditions/Terms-e-Document.aspx. Attention is drawn to the limitation of liability, indemnification and jurisdiction issues defined therein. Any holder of this document is advised that information contained hereon reflects the Company's findings at the time of its intervention only and within the limits of Client's instructions, if any. The Company's sole responsibility is to its Client and this document does not exonerate parties to a transaction from exercising all their rights and obligations under the transaction documents. This document cannot be reproduced except in full, without prior written approval of the Company. Any unauthorized alteration, forgery or falsification of the content or appearance of this document is unlawful and offenders may be prosecuted to the fullest extent of the law. Unless otherwise stated the results shown in this test report refer only to the sample(s) tested and such sample(s) are retained for 30 days only.

6.1.9 TX behaviour under Low Voltage Conditions

Test Method: EN 300 220-1 Clause 5.12.3.2
Test Requirement: EN 300 220-2 Clause 4.3.8.0
EUT Operation:
Ambient: Temp.: 20.0 °C Humid.: 52 % Press.: 105 mbar
Test Status: Tx mode
Test Setup:

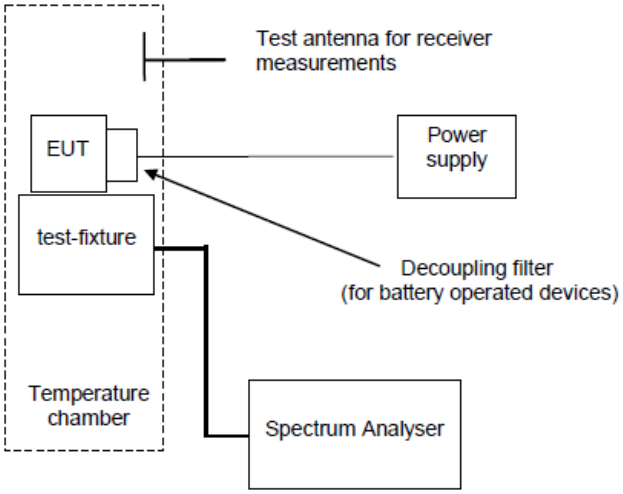

Equipment Used: Refer to section 5 for details.
Limit: EN 300 220-2 Clause 4.3.8.2

Test Data:

Nominal Frequency was: 27.145 MHz

Test Voltage (V)	Test result (MHz)	Test result (output power for relative value)	Limit	Result
$V_{norm:}$ 3.0V dc	27.1450	-6 dBm(REF)	26.957-27.283MHz	PASS
$V_{ext:}$ 2.4V dc	27.1449	-7.5 dBm	26.957-27.283MHz	PASS
$V_{ext:}$ 2.0V dc	27.1449	-9dBm	26.957-27.283MHz	PASS
$V_{lowest:}$ 1.2V dc		cease function		PASS
Remark: 1) No other exceeding any applicable limits were found during the tests 2) Applied test voltage: reduced from 3V to 0V DC				

This document is issued by the Company subject to its General Conditions of Service printed overleaf,–available on request or accessible at http://www.sgs.com/en/Terms-and-Conditions.aspx and, for electronic format documents, subject to Terms and Conditions for Electronic Documents at http://www.sgs.com/en/Terms-and-Conditions/Terms-e-Document.aspx. Attention is drawn to the limitation of liability, indemnification and jurisdiction issues defined therein. Any holder of this document is advised that information contained hereon reflects the Company's findings at the time of its intervention only and within the limits of Client's instructions, if any. The Company's sole responsibility is to its Client and this document does not exonerate parties to a transaction from exercising all their rights and obligations under the transaction documents. This document cannot be reproduced except in full, without prior written approval of the Company. Any unauthorized alteration, forgery or falsification of the content or appearance of this document is unlawful and offenders may be prosecuted to the fullest extent of the law. Unless otherwise stated the results shown in this test report refer only to the sample(s) tested and such sample(s) are retained for 30 days only.

6.1.10 Adaptive Power Control

Not applicable, since the test applied to transmitter adaptive power control using annex C band AA. Please also refer to ETSI EN 300 220-2 V3.1.1 (2017-02) Clause 4.3.9.0.

6.1.11 FHSS equipment

Not applicable, since the test applied to transmitter with FHSS. Please also refer to ETSI EN 300 220-2 V3.1.1 (2017-02) Clause 4.3.10

6.1.12 Short term behaviour

Not applicable, since the test applied to transmitter which operate in bands where T_{on} and T_{off} limits are specified in annex C band Z, AB, AC. Please also refer to ETSI EN 300 220-2 V3.1.1 (2017-02) Clause 4.3.11.0

This document is issued by the Company subject to its General Conditions of Service printed overleaf,–available on request or accessible at http://www.sgs.com/en/Terms-and-Conditions.aspx and, for electronic format documents, subject to Terms and Conditions for Electronic Documents at http://www.sgs.com/en/Terms-and-Conditions/Terms-e-Document.aspx. Attention is drawn to the limitation of liability, indemnification and jurisdiction issues defined therein. Any holder of this document is advised that information contained hereon reflects the Company's findings at the time of its intervention only and within the limits of Client's instructions, if any. The Company's sole responsibility is to its Client and this document does not exonerate parties to a transaction from exercising all their rights and obligations under the transaction documents. This document cannot be reproduced except in full, without prior written approval of the Company. Any unauthorized alteration, forgery or falsification of the content or appearance of this document is unlawful and offenders may be prosecuted to the fullest extent of the law. Unless otherwise stated the results shown in this test report refer only to the sample(s) tested and such sample(s) are retained for 30 days only.

6.1.13 Unwanted emissions in the spurious domain

Test Method: EN 300 220-1 Clause 7.8.2

Test Requirement: EN 300 220-2 Clause 4.2.2.0

EUT Operation:

Ambient: Temp.: 23.0 °C Humid.: 50 % Press.: 1005 mbar

Test Status: Tx mode/Rx mode

Receiver Setup:

Frequency range	Measuring receiver bandwidth	Detector mode
25MHz-1000MHz	100kHz	QP
1GHz-6GHz	1MHz	Peak

Test Setup:

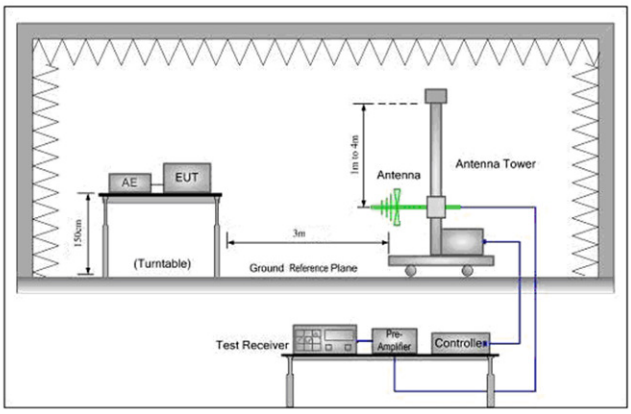

Figure 1. 30MHz to 1GHz

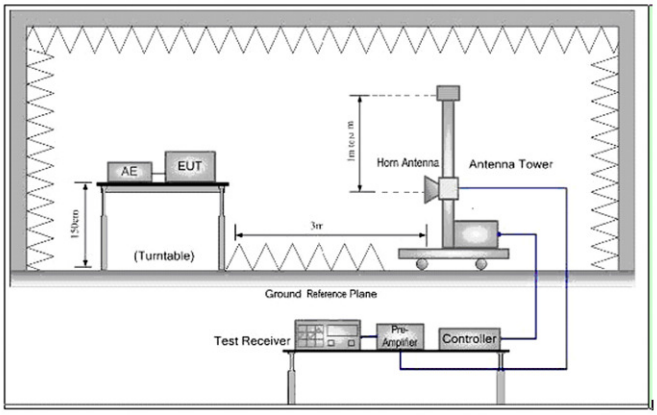

Figure 2. Above 1GHz

Test Procedure: **Below 1GHz test procedure as below:**

1) The EUT was powered ON and placed on a 1.5m high table in the chamber. The antenna of the transmitter was extended to its maximum length. Modulation mode and the measuring receiver shall be tuned to the frequency of the transmitter under test.
2) The disturbance of the transmitter was maximized on the test receiver display by raising and lowering from 1m to 4m the receive antenna and by rotating through 360° the turntable. After the fundamental emission was maximized, a field strength measurement was made.
3) Steps 1) and 2) were performed with the EUT and the receive antenna in both vertical and horizontal polarization.
4) The transmitter was then removed and replaced with another antenna. The center of the antenna was approximately at the same location as the center of the transmitter.
5) A signal at the disturbance was fed to the substitution antenna by means of a non-radiating cable. With both the substitution and the receive antennas horizontally polarized, the receive antenna was raised and lowered to obtain a maximum reading at the test receiver. The level of the signal generator was adjusted until the measured field strength level in step 2) is obtained for this set of conditions.
6) The output power into the substitution antenna was then measured.
7) Steps 5) and 6) were repeated with both antennas polarized.
8) Calculate power in dBm by the following formula:

This document is issued by the Company subject to its General Conditions of Service printed overleaf,–available on request or accessible at http://www.sgs.com/en/Terms-and-Conditions.aspx and, for electronic format documents, subject to Terms and Conditions for Electronic Documents at http://www.sgs.com/en/Terms-and-Conditions/Terms-e-Document.aspx. Attention is drawn to the limitation of liability, indemnification and jurisdiction issues defined therein. Any holder of this document is advised that information contained hereon reflects the Company's findings at the time of its intervention only and within the limits of Client's instructions, if any. The Company's sole responsibility is to its Client and this document does not exonerate parties to a transaction from exercising all their rights and obligations under the transaction documents. This document cannot be reproduced except in full, without prior written approval of the Company. Any unauthorized alteration, forgery or falsification of the content or appearance of this document is unlawful and offenders may be prosecuted to the fullest extent of the law. Unless otherwise stated the results shown in this test report refer only to the sample(s) tested and such sample(s) are retained for 30 days only.

ERP(dBm) = Pg(dBm) – cable loss (Db) + antenna gain (dBd)

where:

Pg is the generator output power into the substitution antenna.

Above 1GHz test procedure as below:

1) Different between above is the test site, change from Semi- Anechoic Chamber to fully Anechoic Chamber and receiving antenna is moved from 1m to 2m.
2) Calculate power in dBm by the following formula:

   EIRP(dBm) = Pg(dBm) – cable loss (Db) + antenna gain (dBi)

   EIRP=ERP+2.15dB

   where:

   Pg is the generator output power into the substitution antenna.

Standby mode test procedure as below:

1) Below 1GHz test procedure Steps 1) to 8) and Above 1GHz test procedure 1) to 2) shall be repeated with the transmitter in the standby condition if this option is available.

Equipment Used: Refer to section 5 for details.

Limit:

Table 11: Spurious domain emission limits

Frequency / State	47MHz to 74MHz 87.5MHz to 118MHz 174MHz to 230MHz 470MHz to 862MHz	Other Frequencies Below 1000MHz	Frequencies above 1000MHz
TX mode	-54dBm	-36dBm	-30dBm
RX and all other modes	-57dBm	-57dBm	-47dBm

This document is issued by the Company subject to its General Conditions of Service printed overleaf,–available on request or accessible at http://www.sgs.com/en/Terms-and-Conditions.aspx and, for electronic format documents, subject to Terms and Conditions for Electronic Documents at http://www.sgs.com/en/Terms-and-Conditions/Terms-e-Document.aspx. Attention is drawn to the limitation of liability, indemnification and jurisdiction issues defined therein. Any holder of this document is advised that information contained hereon reflects the Company's findings at the time of its intervention only and within the limits of Client's instructions, if any. The Company's sole responsibility is to its Client and this document does not exonerate parties to a transaction from exercising all their rights and obligations under the transaction documents. This document cannot be reproduced except in full, without prior written approval of the Company. Any unauthorized alteration, forgery or falsification of the content or appearance of this document is unlawful and offenders may be prosecuted to the fullest extent of the law. Unless otherwise stated the results shown in this test report refer only to the sample(s) tested and such sample(s) are retained for 30 days only.

Test Data:

Tx mode				
Maximum Frequency	**Spurious Emission position and Level**		**Limit**	**Over Limit**
MHz	**Polarity**	**dBm**	**dBm**	**dB**
54.247	V	-57.07	-54	-3.07
81.696	V	-62.52	-36	-26.52
135.921	V	-58.99	-36	-22.99
162.25	V	-54.21	-36	-18.21
217.144	V	-57.35	-54	-3.35
299.314	V	-55.12	-36	-19.12
54.247	H	-68.92	-54	-14.92
81.696	H	-75.53	-36	-39.53
135.921	H	-73.34	-36	-37.34
162.250	H	-68.82	-36	-32.82
299.314	H	-70.25	-36	-34.25
786.803	H	-70.04	-54	-16.04

Rx mode				
Maximum Frequency	**Spurious Emission Level**		**Limit**	**Over Limit**
MHz	**Polaxis**	**dBm**	**dBm**	**dB**
46.995	V	-81.74	-57	-24.74
90.220	V	-85.97	-57	-28.97
211.527	V	-81.80	-57	-24.80
263.819	V	-79.64	-57	-22.64
535.707	V	-78.03	-57	-21.03
986.072	V	-73.35	-57	-16.35
41.713	H	-82.15	-57	-25.15
104.536	H	-85.80	-57	-28.80
155.364	H	-83.65	-57	-26.65
267.546	H	-80.91	-57	-23.91
595.133	H	-76.98	-57	-19.98
916.069	H	-73.47	-57	-16.47

Remark: The Radiated Emissions measurement results above 1GHz-range have a margin of at least 10dB.

This document is issued by the Company subject to its General Conditions of Service printed overleaf,–available on request or accessible at http://www.sgs.com/en/Terms-and-Conditions.aspx and, for electronic format documents, subject to Terms and Conditions for Electronic Documents at http://www.sgs.com/en/Terms-and-Conditions/Terms-e-Document.aspx. Attention is drawn to the limitation of liability, indemnification and jurisdiction issues defined therein. Any holder of this document is advised that information contained hereon reflects the Company's findings at the time of its intervention only and within the limits of Client's instructions, if any. The Company's sole responsibility is to its Client and this document does not exonerate parties to a transaction from exercising all their rights and obligations under the transaction documents. This document cannot be reproduced except in full, without prior written approval of the Company. Any unauthorized alteration, forgery or falsification of the content or appearance of this document is unlawful and offenders may be prosecuted to the fullest extent of the law. Unless otherwise stated the results shown in this test report refer only to the sample(s) tested and such sample(s) are retained for 30 days only.

6.2 Receiver Requirements

Table 1: Receiver categories

Receiver category	Description
1	Category 1 is a high performance level of receiver. In particular to be used where the operation of a SRD may have inherent safety of human life implications.
1.5	Category 1.5 is an improved performance level of receiver category 2.
2	Category 2 is standard performance level of receiver.
3	Category 3 is a low performance level of receiver. Manufacturers have to be aware that category 3 receivers are not able to work properly in case of coexistence with some services such as a mobile radio service in adjacent bands. The manufacturer shall provide another mean to overcome the weakness of the radio link or accept the failure.

The EUT (Rx part) belong to Class 2.

6.2.1 RX Sensitivity

Not applicable, since the test applied to EUT with polite spectrum access instead of duty cycle where permitted by table B.1 in annex B, or table C.1 in annex C or any NRI. Please refer to ETSI EN 300 220-2 V3.1.1 (2017-02) Clause 4.4.1.0.

This document is issued by the Company subject to its General Conditions of Service printed overleaf,–available on request or accessible at http://www.sgs.com/en/Terms-and-Conditions.aspx and, for electronic format documents, subject to Terms and Conditions for Electronic Documents at http://www.sgs.com/en/Terms-and-Conditions/Terms-e-Document.aspx. Attention is drawn to the limitation of liability, indemnification and jurisdiction issues defined therein. Any holder of this document is advised that information contained hereon reflects the Company's findings at the time of its intervention only and within the limits of Client's instructions, if any. The Company's sole responsibility is to its Client and this document does not exonerate parties to a transaction from exercising all their rights and obligations under the transaction documents. This document cannot be reproduced except in full, without prior written approval of the Company. Any unauthorized alteration, forgery or falsification of the content or appearance of this document is unlawful and offenders may be prosecuted to the fullest extent of the law. Unless otherwise stated the results shown in this test report refer only to the sample(s) tested and such sample(s) are retained for 30 days only.

6.2.2 Blocking

Test Method: EN 300 220-1 Clause 8.4.2

Test Requirement: EN 300 220-2 Clause 4.4.2

EUT Operation:

Ambient: Temp.: 21.0 °C Humid.: 54 % Press.: 1005 mbar

Test Status: Rx mode

Test setup:

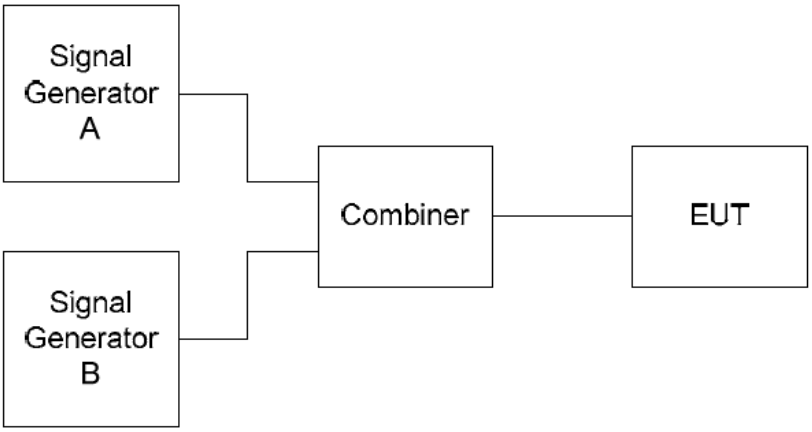

Figure 1

Equipment Used: Refer to section 5 for details.

Limit:

Table 15: Limits for receiver blocking

Requirement	Receiver category			
	1	1.5	2	3
Blocking at ±2 MHz from OC edge fhigh and flow	⩾ -20 dBm	⩾ -43 dBm	⩾ -69 dBm	⩾ -80 dBm
Blocking at ±10 MHz from OC edge fhigh and flow	⩾ -20 dBm	⩾ -33 dBm	⩾ -44 dBm	⩾ -60 dBm
Blocking at ±5 % of Centre Frequency or 15 MHz, whichever is the greater	⩾ -20 dBm	⩾ -33 dBm	⩾ -44 dBm	⩾ -60 dBm

Test Data:

Receiver Category	Frequency Offset	Value(dBm)	Limit(dBm)	Result
2	+2MHz	-41.5	-69	Pass
2	-2MHz	-41.1	-69	Pass
2	+10MHz	-30.2	-44	Pass
2	-10MHz	-29.8	-44	Pass
2	+15MHz	-21.6	-44	Pass
2	-15MHz	-21.2	-44	Pass

This document is issued by the Company subject to its General Conditions of Service printed overleaf,–available on request or accessible at http://www.sgs.com/en/Terms-and-Conditions.aspx and, for electronic format documents, subject to Terms and Conditions for Electronic Documents at http://www.sgs.com/en/Terms-and-Conditions/Terms-e-Document.aspx. Attention is drawn to the limitation of liability, indemnification and jurisdiction issues defined therein. Any holder of this document is advised that information contained hereon reflects the Company's findings at the time of its intervention only and within the limits of Client's instructions, if any. The Company's sole responsibility is to its Client and this document does not exonerate parties to a transaction from exercising all their rights and obligations under the transaction documents. This document cannot be reproduced except in full, without prior written approval of the Company. Any unauthorized alteration, forgery or falsification of the content or appearance of this document is unlawful and offenders may be prosecuted to the fullest extent of the law. Unless otherwise stated the results shown in this test report refer only to the sample(s) tested and such sample(s) are retained for 30 days only.

6.2.3 Clear Channel Assessment threshold

Not applicable, since the test applies to EUT with polite spectrum access instead of duty cycle where permitted by table B.1 in annex B, or table C.1 in annex C or any NRI.. Please refer to ETSI EN 300 220-2 V3.1.1 (2017-02) Clause 4.5.2.0.

6.2.4 Polite spectrum access timing parameters

Not applicable, since the test applies to EUT with polite spectrum access instead of duty cycle where permitted by table B.1 in annex B, or table C.1 in annex C or any NRI.. Please refer to ETSI EN 300 220-2 V3.1.1 (2017-02) Clause 4.5.3.1.

6.2.5 Adaptive Frequency Agility

Not applicable, since the test applies to EUT with AFA, Please refer to ETSI EN 300 220-2 V3.1.1 (2017-02) Clause 4.5.4.0.

This document is issued by the Company subject to its General Conditions of Service printed overleaf,–available on request or accessible at http://www.sgs.com/en/Terms-and-Conditions.aspx and, for electronic format documents, subject to Terms and Conditions for Electronic Documents at http://www.sgs.com/en/Terms-and-Conditions/Terms-e-Document.aspx. Attention is drawn to the limitation of liability, indemnification and jurisdiction issues defined therein. Any holder of this document is advised that information contained hereon reflects the Company's findings at the time of its intervention only and within the limits of Client's instructions, if any. The Company's sole responsibility is to its Client and this document does not exonerate parties to a transaction from exercising all their rights and obligations under the transaction documents. This document cannot be reproduced except in full, without prior written approval of the Company. Any unauthorized alteration, forgery or falsification of the content or appearance of this document is unlawful and offenders may be prosecuted to the fullest extent of the law. Unless otherwise stated the results shown in this test report refer only to the sample(s) tested and such sample(s) are retained for 30 days only.

7 Photographs

7.1 EIRP & Spurious Emission of Tx

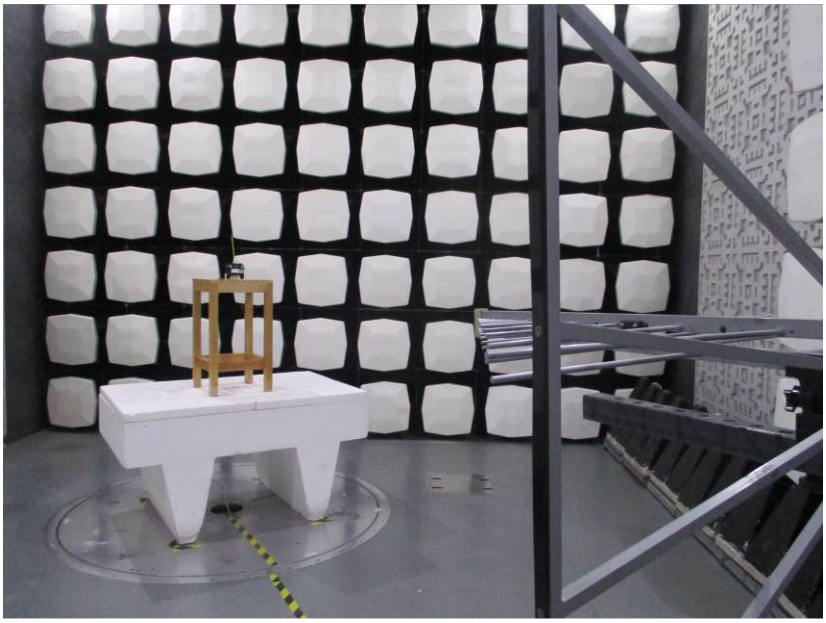

7.2 Spurious Emission of Rx

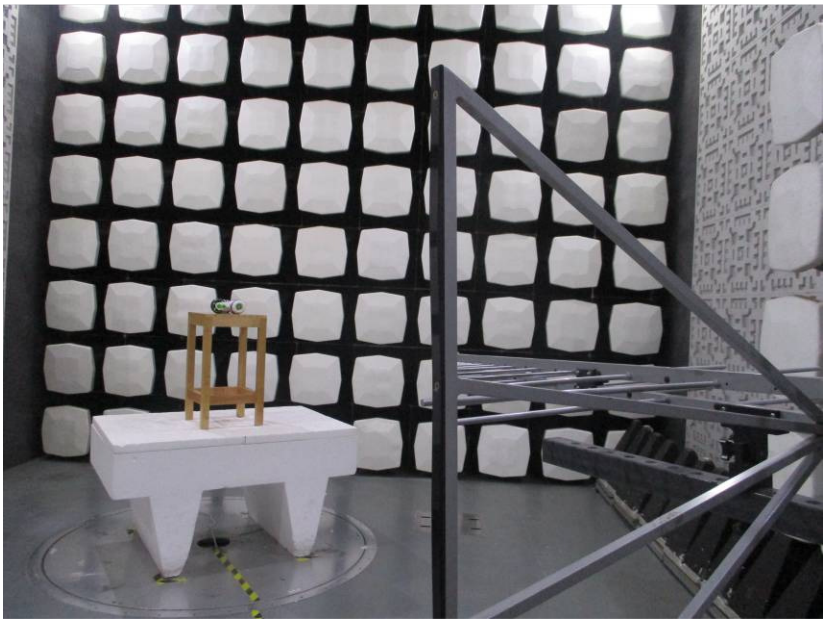

7.3 EUT Constructional Details

Refer to Appendix A - Photographs of EUT Constructional Details for SZEM1703002535CR.

This document is issued by the Company subject to its General Conditions of Service printed overleaf,–available on request or accessible at http://www.sgs.com/en/Terms-and-Conditions.aspx and, for electronic format documents, subject to Terms and Conditions for Electronic Documents at http://www.sgs.com/en/Terms-and-Conditions/Terms-e-Document.aspx. Attention is drawn to the limitation of liability, indemnification and jurisdiction issues defined therein. Any holder of this document is advised that information contained hereon reflects the Company's findings at the time of its intervention only and within the limits of Client's instructions, if any. The Company's sole responsibility is to its Client and this document does not exonerate parties to a transaction from exercising all their rights and obligations under the transaction documents. This document cannot be reproduced except in full, without prior written approval of the Company. Any unauthorized alteration, forgery or falsification of the content or appearance of this document is unlawful and offenders may be prosecuted to the fullest extent of the law. Unless otherwise stated the results shown in this test report refer only to the sample(s) tested and such sample(s) are retained for 30 days only.